Gaisa apstrādes iekārta (AHU)

RIRS 3500H EKO 3.0

Performance
Power consumption

Supply air

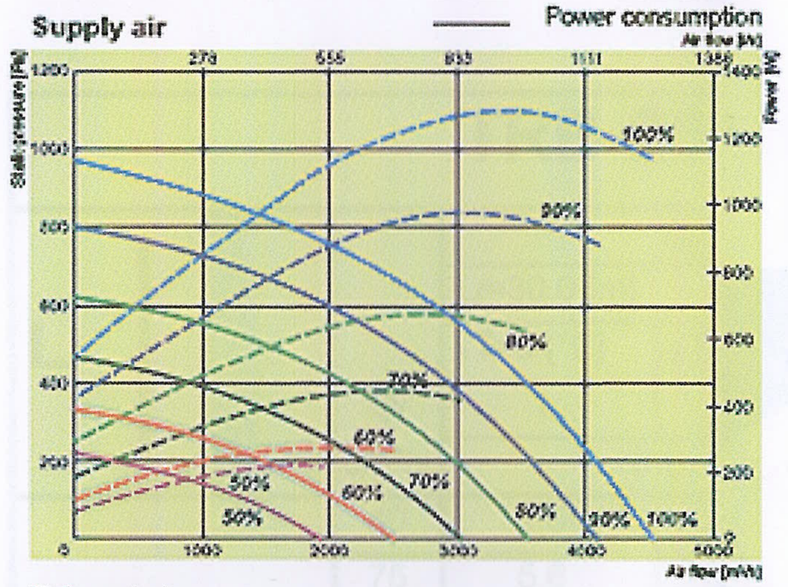

Exhaust air

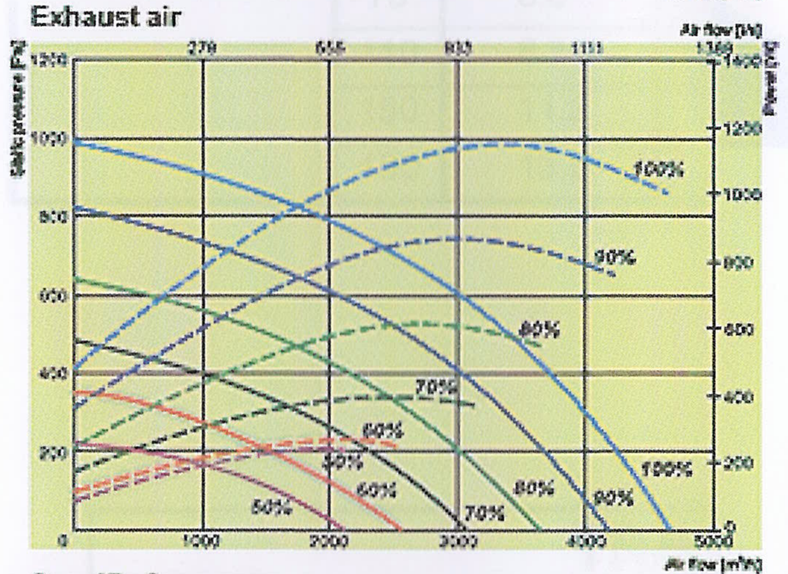

Specific fan power

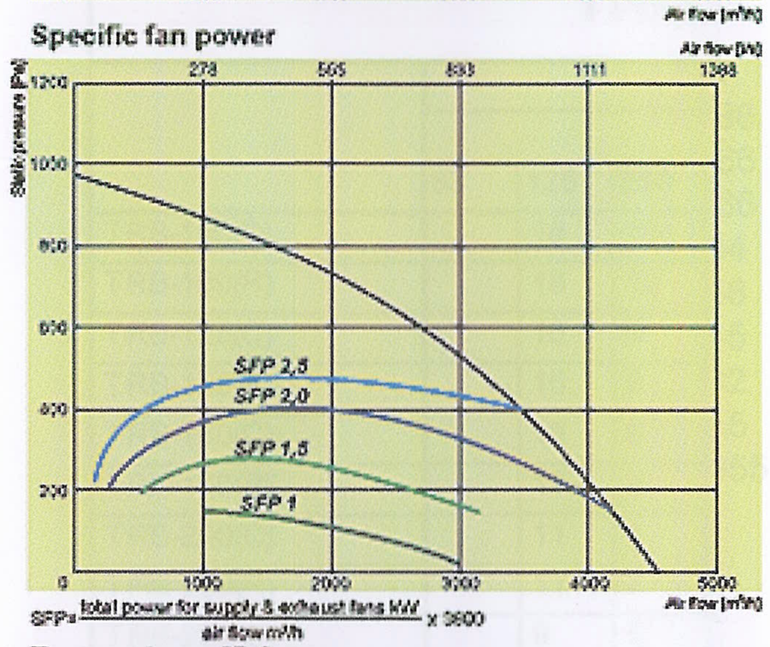

SFP= total power for supply & exhaust fans kW / air flow m/h x 3600

Temperature efficiency

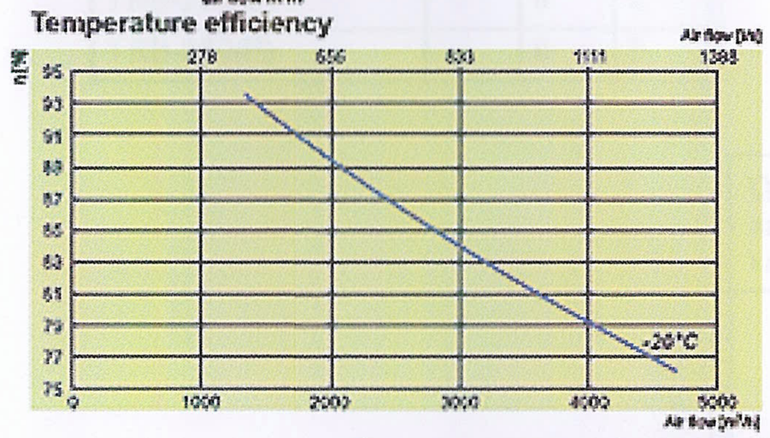

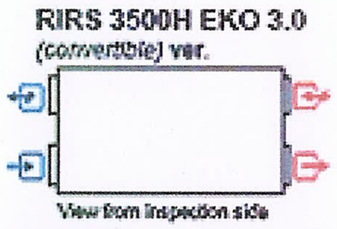

Exhaust air | Extract air | Fresh air | Supply air

Article No.		Version
GAGRRS1764_0020B	3500HE EKO 3.0	Integrated electrical heater.
GAGRRS1765_0021A	3500HW EKO 3.0	Optional water heater.

3500HE / HW EKO 3.0

Water heater (optional) HW ver.				Comfort Box 800x500
Electrical heater HE ver.	phase/voltage	[50Hz/VAC]		~3, 400
		[kW]		9,0
EC fans	phase/voltage	[50Hz/VAC]		~1, 230
exhaust	power/current	[kW/A]		1,340/6
	fan speed	[min⁻¹]		2350
supply	power/current	[kW/A]		1,3/5,75
	fan speed	[min⁻¹]		2350
Thermal efficiency up to*				80%
Max power consumption HE / HW		[kW/A]	14,68/29,43	2,68/12,13
Control board				PRV V2.2
Filter class	exhaust/supply			M5/F7
Housing insulation, mineral wool		[mm]		50
Colour	RAL	grey		7040
Weight (net, without packing) HE / HW		[kg]	492	450
Comply with ERP				2013; 2015
Operation				Indoors
Housing protection class	IP			34

* Calculated according EN 13141-7.

3500HW EKO 3.0	Lwa total, dB(A)	LWA, dB(A)						
		125 Hz	250 Hz	500 Hz	1 kHz	2 kHz	4 kHz	8 kHz
Supply	84	69	73	79	78	77	75	70
Extract	74	60	72	65	62	59	53	42
Surrounding	66	55	60	61	58	56	50	43

Measured at 4065 m/h, 225 Pa

Temperature efficiency (balanced mass flow) EN 13141-7:
Extract air = 20°C/50%RH
Outdoor air = -20°C

Certifications

EUROVENT certified counter flow heat exchanger performance

The company reserves the right to make changes of technical data without prior notice

125

RIRS 2500HE EKO 3.0; 3500HE EKO 3.0; 5500HE EKO 3.0 (horizontal) versions with electrical heater

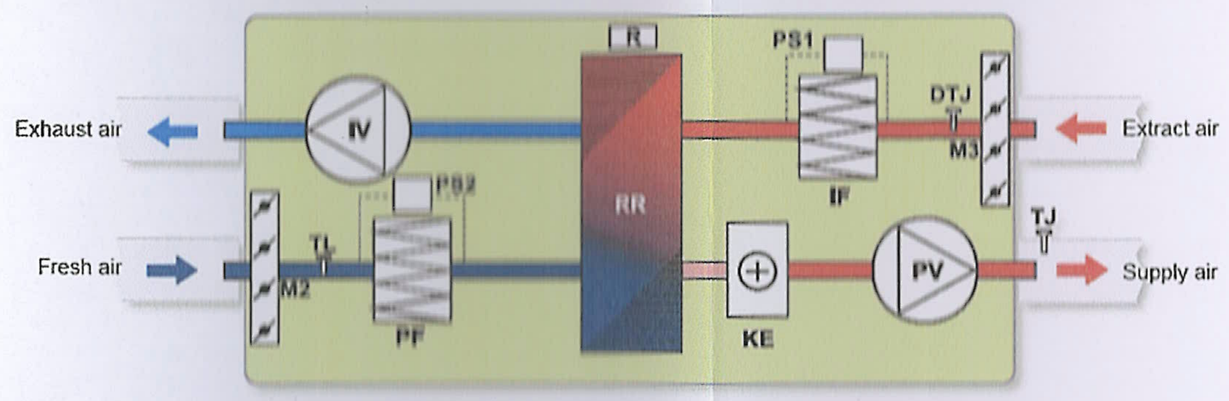

IV - exhaust air fan
PV - supply air fan
RR - rotary heat exchanger
R - rotor motor
KE - electrical heater
PF - fresh air filter (class F7)
IF - extract air filter (class M5)
PS1 - extract air differential pressure switch
PS2 - fresh air differential pressure switch
TJ - temperature sensor for supply air
TL - temperature sensor for fresh air
DTJ -humidity + temperature sensor
M2 - actuator for fresh air damper
M3 - actuator for extract air damper

Temperatūras regulators TPC

Pasūtītājs: Laucienes pagasta pārvalde "Pagastmāja", Lauciene, Laucienes pag., Talsu nov., LV-3285				Objekts: Laucienes kultūras nama rekonstrukcija- „Kultūras nams"., Lauciene, Laucienes pag., Talsu nov., LV-3285 kad.88700110271			
Proj.vad.				Gaisa apstrādes iekārtas (AHU) rakstūrojumi	Stadija	Lapa	Lapas
AVK d.vad.	M.Jurševskis		Maijs.2018		TS	AVK-V5	
Izpildītāja	M.Jurševskis		Maijs.2018		Izpild. SIA AJOR		
Pasūtījuma numurs		05M/2018		Mērogs - bez mēroga			